UNS Series
Micro USB Connector SMT

Micro "B" Type 5 Pin SMT

with straight Ground tabs and locating pegs

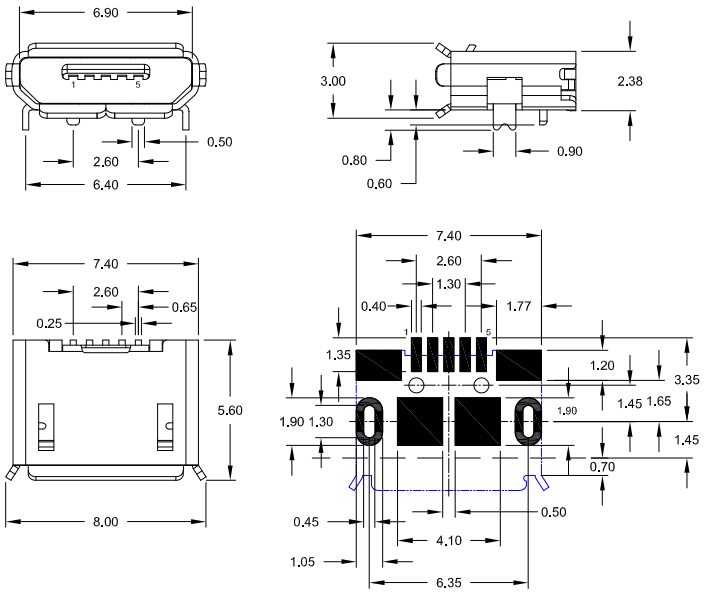

ORDER CODE **USB 2.0** corresponding:

UNS-B05-SKB2P-58/R

with straight Ground tabs and without locating pegs

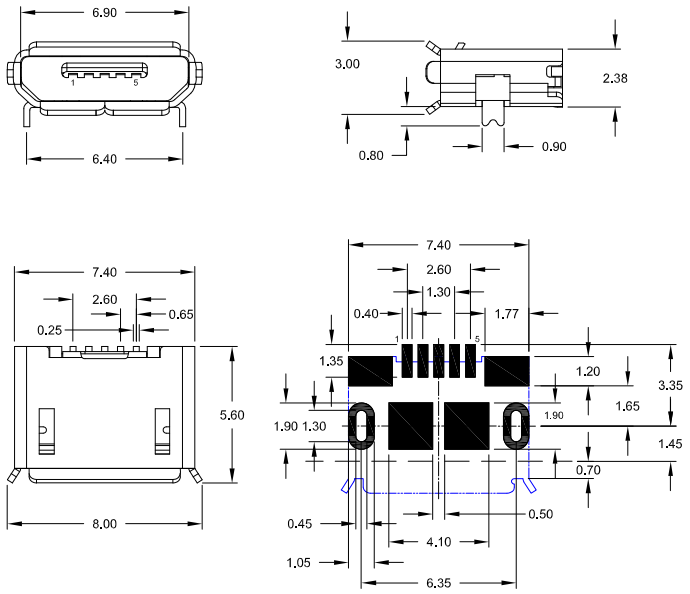

ORDER CODE **USB 2.0** corresponding:

UNS-B05-SKB2L-58/R

"Wing" Style with locating pegs

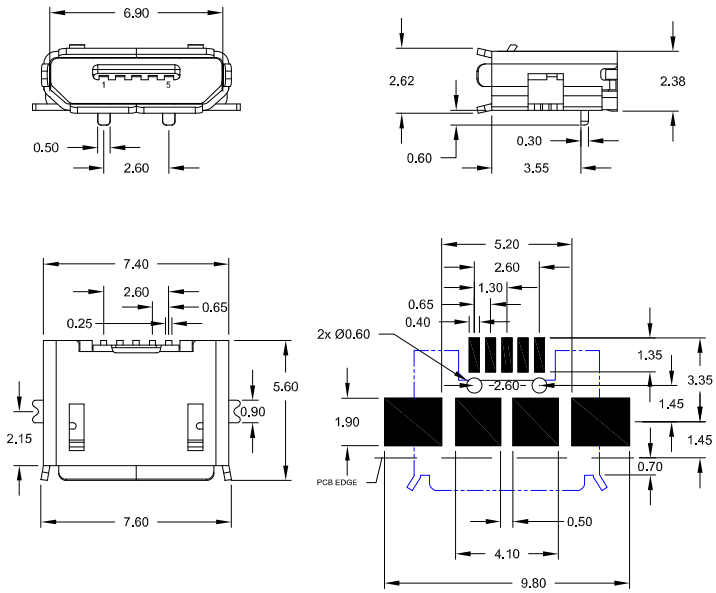

ORDER CODE **USB 2.0** corresponding:

UNS-B05-SKB21-58/R

Waterproof IP67 - protected

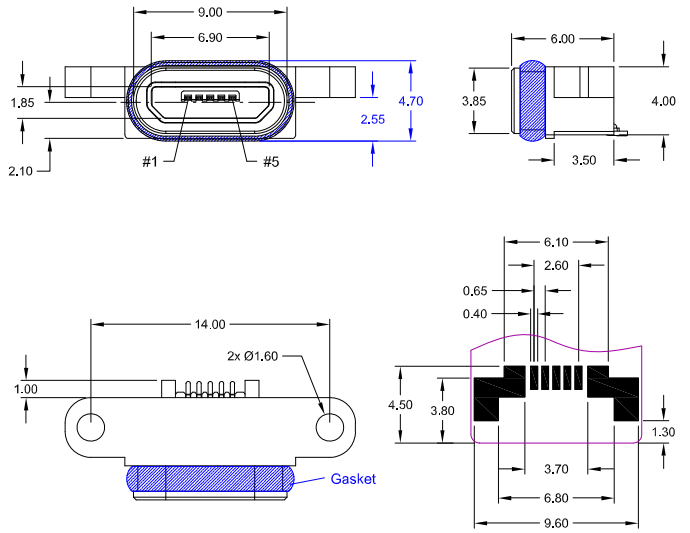

ORDER CODE **USB 2.0** corresponding:

UNS-B05-SWB2W-56/R

Specification

Electrical

Current rating	1 A / Contact
Signal line (No. 1 to 5)	1.8A (No. 1 & 5)
2-line for Power	0.5A (No. 2 to 4)
Voltage rating	AC 30V (rms)
Withstanding voltage	100V AC (rms) 1 Minute
Insulation resistance	100MΩ min. (500V DC)
Contact resistance	30mΩ max.

Material

Contact *(RoHS compliant)*	PhBz
Plating:	
Solder area	Au 1μ" over Ni
Contact area	Au 30μ" over Ni
	(Au 10μ" waterproof type)
Housing *(RoHS compliant)*	LCP black UL 94-V0
Shell *(RoHS compliant)*	Steel, 120μ"– 200μ" Sn plated

Mechanical

Mating cycles	10.000 min.

Others

Operating temp.	-30° C to +80° C
Processing temp.	+260° C +/-5°C for 5 sec. max.