HM Series
HDMI Connector

-SMT- "Side Entry" with straight solder pegs

without mounting flange

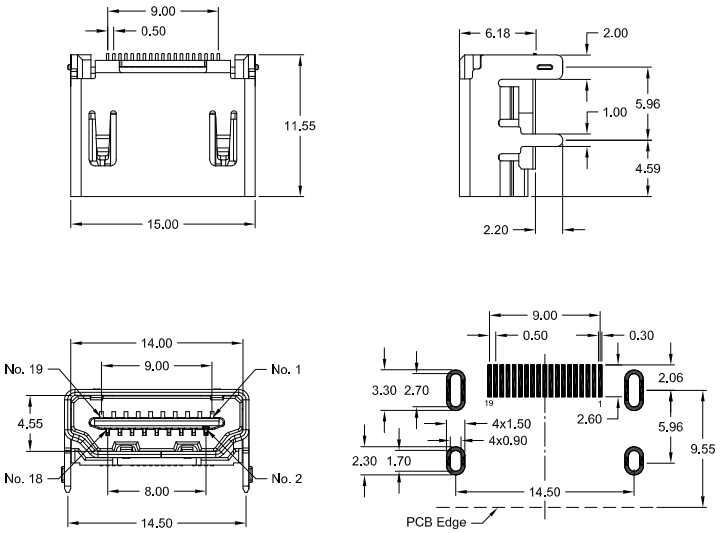

with top mounting flange

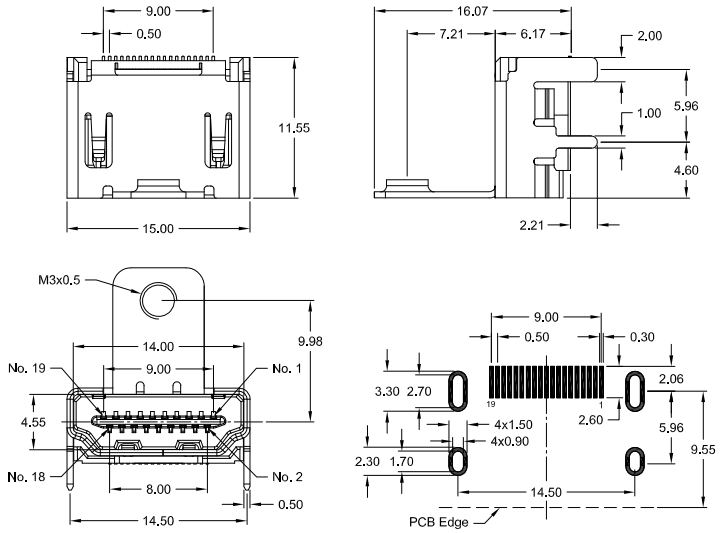

Specifications

Electrical:	
Current rating	0.5 A
Insulator resistance	100 M Ω min. at 150V DC
Contact resistance	30 m Ω max.
Withstanding voltage	500V (rms) AC 1 Min.
Operating temperature	-25° C to +85° C
Mechanical:	
Insertion force	44.1 N max.
Withdrawal force	9.8 N min.
Durability	10.000 Cycles
Material:	
Contact *RoHS compliant*	Copper Alloy
Plating	Sn solderpegs / Au contact
Insulator *RoHS compliant*	Hi temp Thermoplastic black UL 94V-0
Shell	Steel; Sn *(leadfree)* over Ni

How to order

HMR - B19 - SS X 1 - 98 / X

Style	Plating	Option
K = without mounting flange	**95** = Tin *(leadfree)* / Gold flash	**R** = reel packing w/o pick up tape
L = with top mounting flange	**97** = Tin *(leadfree)* / Gold 15μ"	**BT** = reel packing with pick up tape
	98 = Tin *(leadfree)* / Gold 30μ"	